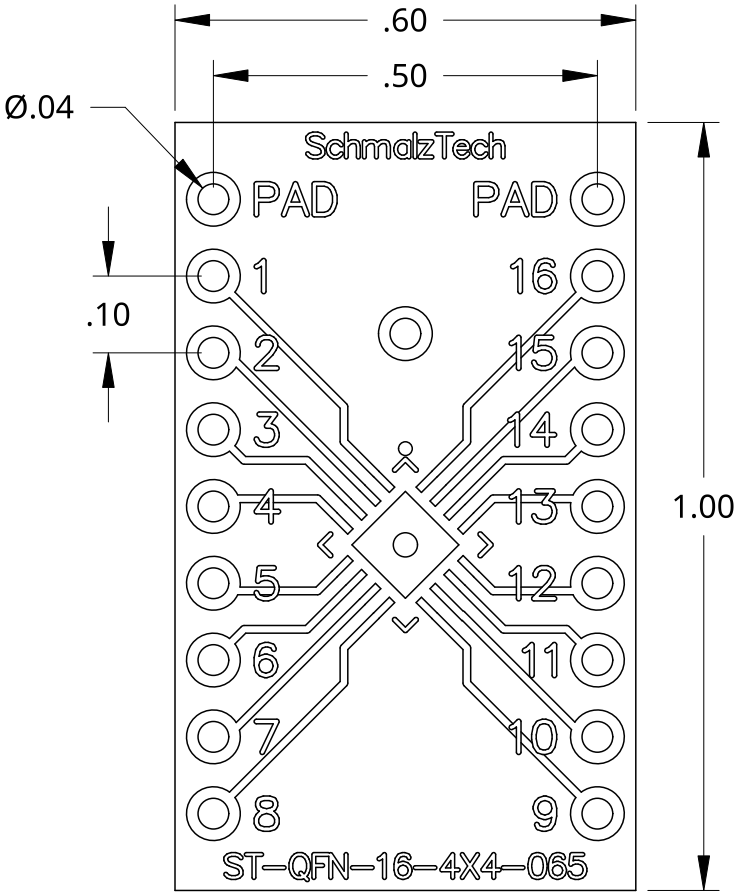

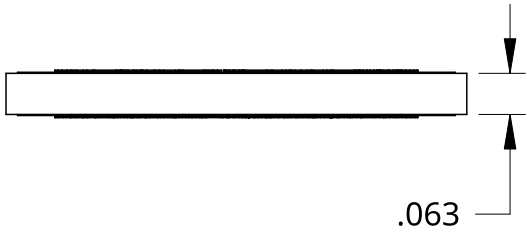

FOOTPRINT DIMENSIONS

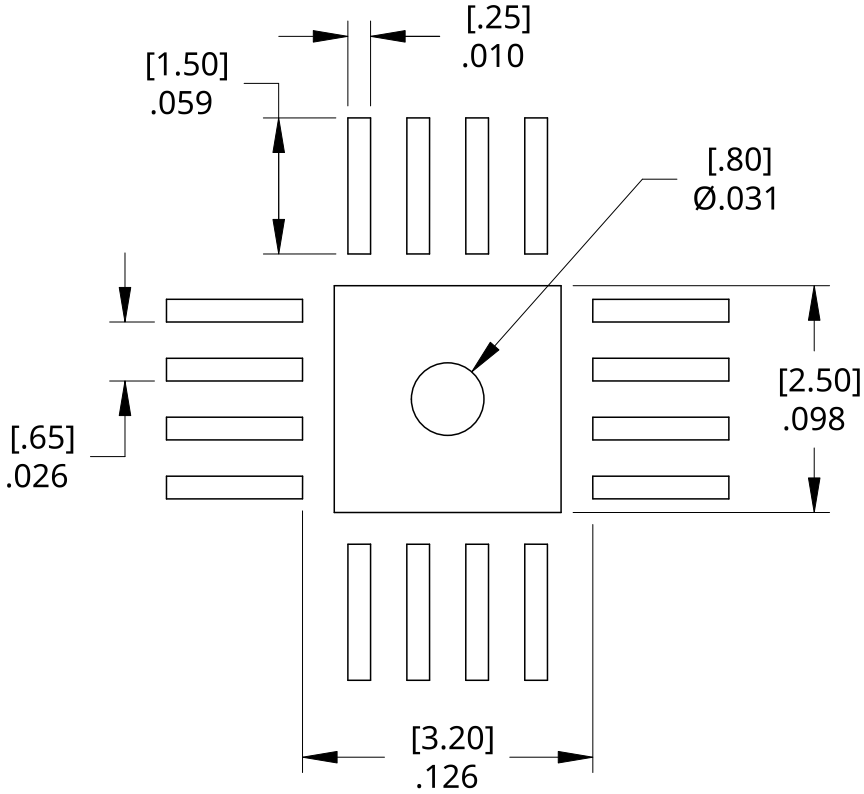

SCHMALZTECH
PHONE: (844) 399-9213
EMAIL: sales@schmalztech.com
WEB: www.schmalztech.com

TITLE	ST-QFN-16-4X4-065
DESCRIPTION	16-PIN QFN ADAPTER, 4MM X 4MM, 0.65MM PITCH
SIZE	A
DWG NO.	ST-QFN-16-4X4-065
REV.	0
UNITS	INCH
DATE	06/17/2024
SHEET	1 of 1